1951

The experimental determination of the bending and torsional stiffness of ab eam with rotationally constant moment of inertia with varying amoutns of permanent twist

Woolston, John; Lentz, Leon H.

Massachusetts Institute of Technology

THE EXPERIMENTAL DETERMINATION OF THE BENDING AND TORSIONAL STIFFNESS OF A BEAM WITH ROTATIONALLY CONSTANT MOMENT OF INERTIA WITH VARYING AMOUNTS OF PERMANENT TWIST

JOHN WOOLSTON
AND
LEON H. LEUTZ

Mart 21

Artisan Gold Lettering & Smith Bindery

593 - 15th Street Oakland, Calif. GLencourt 1-9827

DIRECTIONS FOR BINDING

BIND IN
(CIRCLE ONE)

BUCKRAM
COLOR NO. 8854

FABRIKOID
COLOR

LEATHER
COLOR

OTHER INSTRUCTIONS

Letter in gold.
Letter on the front cover:

THE EXPERIMENTAL DETERMINATION OF THE BENDING AND TORSIONAL STIFFNESS OF A BEAM WITH ROTATIONALLY CONSTANT MOMENT OF INERTIA WITH VARYING AMOUNTS OF PERMANENT TWIST

JOHN WOOLSTON
AND
LEON H. LEUTZ

shelf
LETTERING ON BACK TO BE EXACTLY AS PRINTED HERE.

WOOLSTON
AND
LEUTZ

1951

THESIS
W85

5

THE EXPERIMENTAL DETERMINATION OF THE BENDING AND TORSIONAL STIFFNESS OF A BEAM WITH ROTATIONALLY CONSTANT MOMENT OF INERTIA WITH VARYING AMOUNTS OF PERMANENT TWIST.

by

LIEUTENANT (Junior Grade) JOHN WOOLSTON, U. S. Navy

B.S., MASS. INST. OF TECH., 1944

LIEUTENANT (Junior Grade) LEON H. LEUTZ, U. S. Navy

B.S., UNIV. OF MICHIGAN, 1945

SUBMITTED IN PARTIAL FULFILLMENT OF THE

REQUIREMENTS FOR THE DEGREE OF

NAVAL ENGINEER.

from the

MASSACHUSETTS INSTITUTE OF TECHNOLOGY

1951

ABSTRACT

Title of Thesis: "The Experimental Determination of the Bending and Torsional Stiffness of a Beam with Rotationally Constant Moment of Inertia with Varying Amounts of Permanent Twist."

Authors: Lieutenant (J.G.) John Woolston, U. S. Navy.
Lieutenant (J.G.) Leon H. Leutz, U. S. Navy.

Submitted for the degree of Naval Engineer in the Department of Naval Architecture and Marine Engineering on May 18, 1951.

The object of this thesis was to investigate the variation of bending and torsional stiffness of a beam with permanent twist. The mild steel beam was cruciform in cross section with webs 0.102" thick and a total depth of 1.503" with .200" fillet radii at the center. The beam length was 50 inches. The effects noted on this beam must modify calculations for other twisted beams such as propeller blades, pump rotors, turbine blades, etc.

The torsional stiffness was calculated from the elastic angle of twist in the beam length under a constant torsional moment. The bending stiffness was calculated from bending deflections measured with the beam acted up on by constant bending moments. Bending stresses were in the elastic range.

The torsional stiffness increased with permanent twist approximately as the square of the helical angle of the outer beam fibers. The stiffness was doubled at a helical angle of 0.27 radians. This checked rather closely with the results of previous theoretical work. The overall results of the torsion tests conform to theory for cross sections approximating simple finned members.

SUMMARY

Title of Thesis: "The Experimental Determination of the Bending and Torsional Stiffness of a Beam with Eccentrically Connected Movement of Inertia with Varying Magnitude of Prescribed Twist."

Author: Lieutenant (J.G.) John Montgomery, U. S. Navy.
Lieutenant (J.G.) Dean R. Evans, U. S. Navy.

Submitted for the degree of Naval Engineer in the Department of Naval Architecture and Marine Engineering on May 16, 1951.

The object of this thesis was to investigate the relations of bending and torsional stiffness of a beam with permanent twist. The solid steel beam was rectangular in cross section with depth 0.102" thick and a total length of 1.500" with .100" fillet radii at the corner. The beam length was 15 inches. The efforts making up this beam must modify calculations for other twisted beams such as propeller blades, pump rotors, turbine blades, etc.

The torsional stiffness was calculated from the elastic angle of twist in the beam length under a constant torsional moment. The bending stiffness was calculated from bending deflections measured with the beam acted upon by a constant bending moment. Bending strains were in the elastic range.

The torsional stiffness increased with permanent twist approximately as the square of the initial angle of the beam about their axis. The stiffness was greater for a twisted angle of 0.21 radians. This checked rather closely with the results of previous theoretical work. The overall results of the thesis have compared to theory for cross sections approximating simple flat rectangles.

In the bending tests the ratio of deflection to the theoretical deflection, based on simple beam theory, increased approximately as the cube of the helical angle to a value of helical angle of about 0.15 radians. This indicates that the beam becomes less stiff as the helical angle increases. At higher angles of twist the curve droops, reaching a maximum deflection ratio of 1.32 at a helical angle of 0.23 radians. The last experimental point showed a deflection ratio of 1.20 at a helical angle of 0.314.

The results of the bending tests show quantitatively the effect of twist on bending stiffness of a member of a particular section. Because this effect is large and its cause unknown it is obvious that much more experimental and theoretical work must be done to establish theories for the many applications of twisted beams in practice.

Cambridge, Massachusetts
18 May, 1951

Professor J. S. Newell
Secretary of the Faculty
Massachusetts Institute of Technology
Cambridge, Massachusetts

Dear Sir:

In accordance with the requirements for the Degree of Naval Engineer, we submit herewith a thesis entitled "The Experimental Determination of the Bending and Torsional Stiffness of a Beam with Rotationally Constant Moment of Inertia with varying amounts of Permanent Twist."

Respectfully,

ACKNOWLEDGEMENT

The authors are deeply indebted to Professor J. P. DenHartog of the Massachusetts Institute of Technology whose inspiration and guidance made this thesis possible.

ACKNOWLEDGMENT

The author is deeply indebted to Professor L. F. Dwelshauvers of the Massachusetts Institute of Technology, whose instruction and guidance made this thesis possible.

TABLE OF CONTENTS

	Page
ABSTRACT (Summary)	1
NOMENCLATURE	1
INTRODUCTION	2
PROCEDURE	6
RESULTS	15
DISCUSSION OF RESULTS	21
CONCLUSIONS AND RECOMMENDATIONS	24
APPENDIX	
A. Application of the Membrane Analogy	26
B. Data	29
C. Sample Calculations	32
D. Bibliography	33

TABLE OF CONTENTS

Page

LIST OF FIGURES (Continued) 1

TECHNICALITIES 1

DEFINITIONS 2

THE GOAL 4

BASICS 10

DESCRIPTION OF PROCEDURE 21

CONCLUSIONS AND RECOMMENDATIONS 28

APPENDIX

A. Tabulation of the Elementary Analogy 30

B. Data 32

C. Random Calculations 34

D. Bibliography 36

LIST OF ILLUSTRATIONS

		Page
FIGURE I	The Arrangement of the beam during Bending Tests	4
FIGURE II	Close-up of the Beam at $\beta_o = 0.314$	5
FIGURE III	Beam Arrangement in Bending Tests	11
FIGURE IV	Design Dimensions of Beam and Fittings	12
FIGURE V	Micrometer Readings of Beam Dimensions	13
FIGURE VI	Strain Gage Data and Location	14
FIGURE VII	Torsional Stiffness vs. Helical Angle	16
FIGURE VIII	Table of Torsion Data and Results	17
FIGURE IX	Bending Stiffness vs. Helical Angle	18
FIGURE X	Table of Displacements of Point 3 and Support Point from Point 2, Center of Beam	19
FIGURE XI	Bending Deflection Notations	20
FIGURE XII	Portion of Beam Cross Section Showing Stations used in Calculating Membrane Volume used with Membrane Analogy	28
FIGURE XIII	Deflection Readings in Inches at Various Stations, Values of β_o, and Values of Load	30
FIGURE XIV	Strain Gage Readings in Micro Inches per Inch for Various Values of β_o and for Various Loads	31

LIST OF ILLUSTRATIONS

		Page
FIGURE I	The Correlation of the Wave Bending Theory Tests	4
FIGURE II	Cross-sec of the Beam at $\beta_0 = 0.314$	8
FIGURE III	Beam Arrangements in Bending Tests	11
FIGURE IV	Design Considerations of Beam and Fittings	12
FIGURE V	Microscopic Readings of Beam Deformations . . .	13
FIGURE VI	Strain Gage Unit and Location	14
FIGURE VII	Vertical Deflects vs. Bending Angle	16
FIGURE VIII	Table of Torsion Data and Results	17
FIGURE IX	Bending Deflects vs. Bending Angle	18
FIGURE X	Table of Displacements of Point 2 and Deviation from Plane A. Center of Beam	19
FIGURE XI	Bending-Torsion Functions	20
FIGURE XII	Torsion of Beam Curve Showing Stations used in Calculating Laminarane Stresses used with Airscrew Energy	23
FIGURE XIII	Ultimate Strength in Bending at Various Positions, Values of β_0 , and Failure of Beam	29
FIGURE XIV	Strain Gage Readings in Micro Inches per Inch for Various Values of β_0 and for Various Loads	31

NOMENCLATURE

L = Length of beam from load to load or 50".

L' = Length of beam used in measurement of torsional stiffness in inches.

α = Angle of permanent twist in the beam in degrees.

ϕ = Angle of elastic twist of the beam under the action of torsional moment, T, where the moment was applied to the beam over a length L'; ϕ in degrees.

β_o = Helical angle of outer fiber of the beam = $\frac{\alpha \times r_o}{57.3 \times L}$ radians.

r_o = Radius of the outer fiber of the beam in inches or 0.751".

J = Torsional stiffness of the beam, T/θ

J/J_s = Ratio of the torsional stiffness of the twisted beam to that of the straight beam.

T = Torsional moment, inch pounds.

θ = Angle of elastic twist per unit length as a result of the torsional moment; radians per unit length.

Δ = Displacement of a point on the beam when loaded, measured from the unloaded position.

δ = Displacement of a point on the loaded beam from the tangent at the center of the beam, corrected for lack of straightness in the unloaded beam.

δ_o = Theoretical displacement from horizontal tangent at center of beam, based on simple beam theory.

δ/δ_o = Ratio of displacement of beam to theoretical displacement. $\delta/\delta_o = (EI)_o / EI =$ ratio of original stiffness to stiffness at a given angle of permanent twist.

Notations used

L — Length of beam from load to load or L_1.

L' = Length of beam used in numerator of transformed equations to indices.

α — Angle of permanent twist in the beam in degrees.

ϕ = Angle of elastic twist of the beam under the action of torsional moment T, where the moment was applied to the beam over a length L', ϕ in degrees.

β_a = Initial angle of twist either of the beam = $\frac{\alpha \times 10}{57.3 \times L}$ radians.

β_m — Value of the total twist of the beam in inches or $L_1 \beta'$.

Σ = Torsional stiffness of the beam, Σ/θ

Σ/Σ_s = Ratio of the torsional stiffness of the twisted beam to that of the straight beam.

T — Torsional moment, lock pounds.

θ = Angle of elastic twist per unit length as a result of the torsional moment reduces per unit length.

Δ — Displacement of a point on the beam when loaded, measured from the undeflected position.

δ = Displacement of a point on the loaded beam from the length of the center of the beam, correction for lack of straightness in the unloaded beam.

δ_c = Displacement displacement from horizontal length at center of beam, based on simple beam theory.

δ/δ_c = Ratio of displacement of beam to theoretical displacement.

$\delta/\delta_c = (EI)_c / EI =$ ratio of original stiffness to stiffness at a given angle of permanent twist.

INTRODUCTION

Conventional beam theory states that if the EI product of a beam is constant, that is the stress-strain relationship is linear and the moment of inertia does not change, the beam will maintain the same bending stiffness, EI. Under these conditions the beam will always deflect the same amount under identical loadings.

The question then arises as to what happens to the bending stiffness when the beam has a longitudinal twist. If the modulus of elasticity is constant and the section has a rotationally constant moment of inertia, that is the I is the same about all axis through the center of gravity of the beam section, will the beam theory break down for a twisted beam? In the case of helical pump impellers and also in airplane propellers with their inherent pitch this question of twisted beams arises. The pump impeller designer will want to know the impeller stiffness for strength and for vibration characteristics. The propeller designer will pose the same questions concerning his design.

As far as is known no experimental or theoretical work has been done on the above question of bending stiffness. However, it is the belief of some engineers that the bending stiffness is not the same for a twisted beam as for a straight beam with the same EI. In one instance the designers of airplane propellers find it difficult to calculate the exact natural frequency of vibration of the blades and their results may be 15% in error from the actual value. This error may be due to using an incorrect value of the bending stiffness of the blade because

INTRODUCTION

Conventional beam theory states that if the product of a beam is constant, that is the stiffness relationship is linear and the moment of inertia does not change, the beam will possess the same bending stiffness, i.e. linear beam theory the beam will always deflect the same amount under identical loadings.

The question then arises as to what happens to the bending stiffness when the beam has a longitudinal taper. If the moment of inertia is increased and the section has a substantially increased moment of inertia, that is the 1 is the larger areas will move through the center of gravity of the beam section, will use a much larger bread beam for a tapered beam? In the case of uniform gauge beam theory and then in structure provisions also there is no quantum of increased moving stress. The usual designer will want to know the logically efficiency for strength and the structure characteristics. The principle designer will take the same assumptions concerning the design.

As far as to review the experimental or theoretical work has been done on the above question of bending stiffness. However, it is the belief of some engineers that the bending stiffness is not the same for a tapered beam as for a straight beam with the same 1. In our lessons the designers of structure properties that it difficult to calculate the exact natural frequency of vibration of the blades and their results may be 10% in error from the actual value. This error may be due to using an incorrect value of the bending stiffness of the blade because

they do not account for the twist.

The experimental determination of the variation of bending stiffness vs. angle of permanent twist is then begun without knowing the nature of the possible results or if there are any variations whatever. It is known, however, that in applying the angle of permanent twist to the beam that the outer fibers will be yielded in tension and the inner fibers will be yielded in compression. However, during the bending tests, since the beam is free to change its length longitudinally, the state of longitudinal stress will be well below the yield stress after the twisting moment is removed even though the beam has been yielded. The stress pattern of the beam will be quite complicated because of the bending stresses being superimposed upon the stresses that have been set up during the application of the permanent twist. It is felt that the latter stresses will have little effect upon the stiffness of the beam as long as the total stress is kept below the proportional limit. If there is a change in bending stiffness with changing angles of permanent twist it is most likely due to the interaction of the stresses caused by the geometry of the beam.

The other major topic to be examined here is the variation of the torsional stiffness of a beam as the angle of permanent twist is varied. This subject has been theoretically and experimentally studied and a bases for a comparison of results is at hand. Let it suffice to say that the torsional stiffness will increase with the angle of permanent twist and that for a rectangular beam this increase is primarily a function of the square of the height to thickness ratio of the beam cross section.

they do not exhaust for the public.

The experimental determination of the variation of bending stiffness vs. angle of permanent twist is here begun without knowing the nature of the possible results, as it does not yet exist anywhere. It is known, however, that in solid bar angle of permanent twist is low because that the outer fibers will be stressed in tension and the inner fibers will be stressed in compression. However, during the bending tests, when the beam is free to change its length longitudinally, the stress at longitudinal stress will be well below the yield stress, thus the bending moment is recovered even though the beam has been yielded. The stress pattern of the beam will be quite complicated because of the bending stresses being superimposed upon the stresses that have been set up during the application of the permanent twist. It is felt that the latter stresses will have little effect upon the stiffness of the beam as long as the total stress is kept below the proportional limit. If there is a change in bending stiffness with changing angle of permanent twist it is most likely due to the interaction of the stresses caused by the geometry of the beam.

The whole major topic to be considered here is the variation of the torsional stiffness of a beam as the angle of permanent twist is varied. This subject has been theoretically and experimentally studied and a basis for a computation of results is at hand. It is sufficient to say that the torsional stiffness will increase with the angle of permanent twist and that for a rectangular beam this increase is primarily a function of the square of the height to thickness ratio of the beam cross section.

FIGURE I

THE ARRANGEMENT OF THE BEAM DURING BENDING TESTS

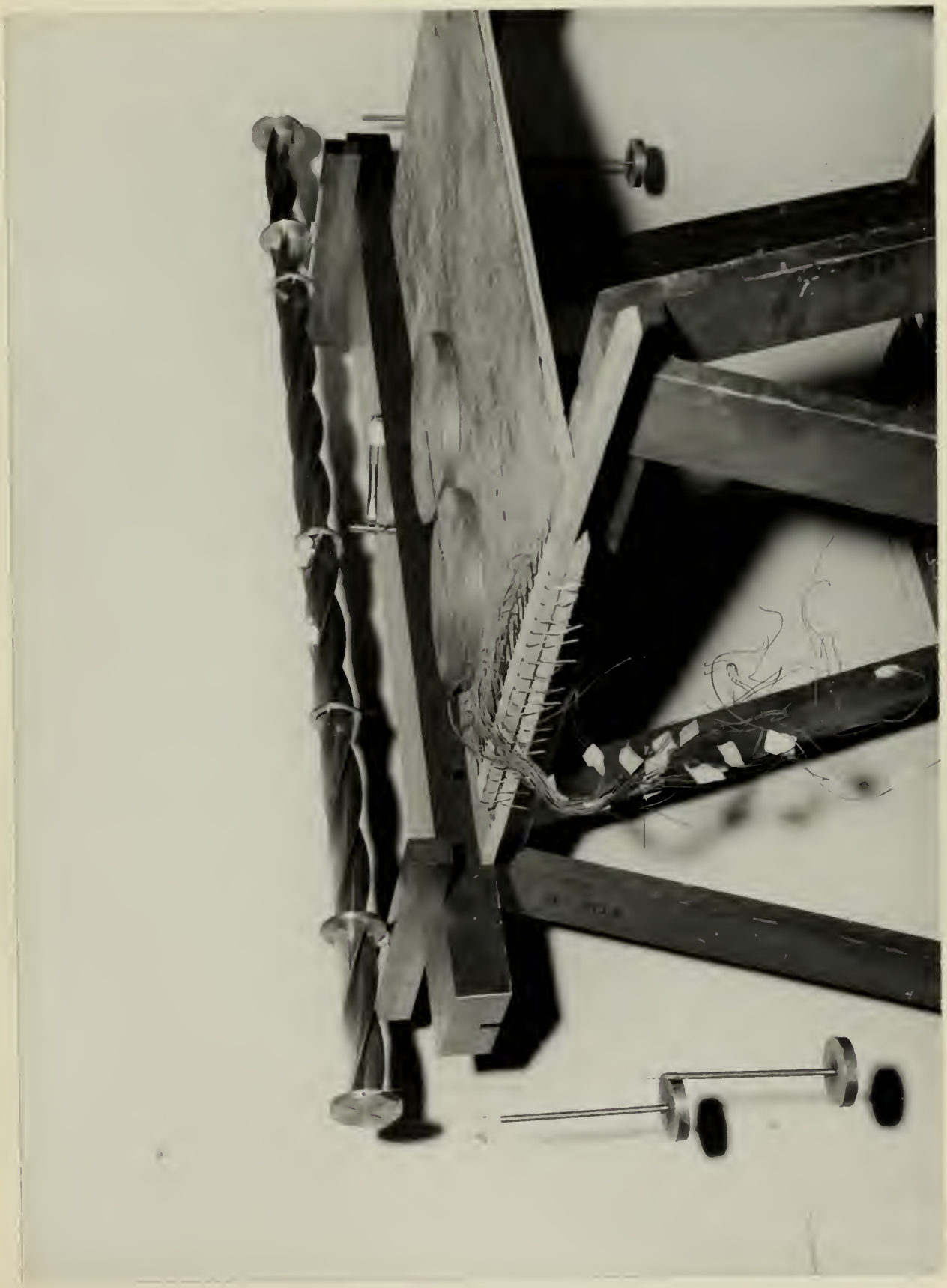

FIGURE II

CLOSE-UP OF THE BEAM AT $\beta_0 = .314$

PROCEDURE

The beam shown in Figure IV was designed with a rotationally constant moment of inertia in order that the conditions of the thesis could be met. The beam dimensions were chosen on the basis of predictable results to be obtained from the laboratory technique employed. The bending stiffness of the beam was to be obtained from the deflection of the beam loaded as shown in Figure III. This laoding produces a constant bending moment on the beam between the supports. These deflections, to be measured with an inside micrometer (see Figure I), were to have an approximate maximum value of .100" at the center of the beam while keeping the stress in the beam well below the yield stress of the material, mild steel, or about 15,000 psi. The .100" maximum deflection figure was chosen since it was felt that an error of .001" would have to be accepted in the deflection measurements. This then would limit the error to 1% at the maximum deflection point. Furthermore, the loads to be used on the beam would have to be of a size that could be readily applied in the laboratory.

In order to obtain the variation of bending stiffness with the angle of permanent twist the beam was to be given additional twist prior to each run. Since there were no mechanical means of applying this twist available it would have to be applied manually. This condition further dictated the beam dimensions but it was found by using the membrane analogy that this condition of manual twisting of the beam did not necessitate a change in the beam dimensions derived from the above

PROCEDURE

The beam shown in Figure IV was designed with a rotationally symmetric moment of inertia in order that the conditions of the theory could be met. The beam dimensions were chosen on the basis of predictable results to be obtained from the laboratory equipment employed. The bending stiffness of the beam was to be obtained from the deflection of the beam loaded as shown in Figure III. This loading produces a constant bending moment on the beam between the supports. These deflections, to be measured with an inside micrometer (see Figure I), were to have an approximate maximum value of .100" at the center of the beam while keeping the stress in the beam well below the yield stress of the material, mild steel, or about 15,000 psi. The .100" maximum deflection figure was chosen since it was felt that an error of .001" would have to be accepted in the deflection measurements. This then would limit the error to 1% at the maximum deflection point. Furthermore, the loads to be used on the beam would have to be of a size that could be readily applied in the laboratory.

In order to obtain the variation of bending stiffness with the angle of permanent twist the beam was to be given additional twist prior to each run. Since there were no mechanical means of applying this twist available it would have to be applied manually. This condition further dictated the beam dimensions but it was found by using the membrane analogy that this condition of manual twisting of the beam did not necessitate a change in the beam dimensions derived from the above

bending criteria. The final beam design is shown in Figure IV.

The beam and its fittings were manufactured at the Boston Naval Shipyard. It was planed from solid stock, heat treated and planed to its final dimensions. Because of the length of the beam and the play in the planer head it was found that the design tolerances could not be met. The beam micrometer readings are shown in Figure V. From these readings a mean value of flange thickness was taken as .1020" and mean beam depth of 1.5030". The moment of inertia of the section was calculated from these mean values and found to be .02925 in.^{4}. The support rings, load rings and deflection rings were hand filed and fitted to the beam snuggly with a hand fit. The bed plate was surface ground to a smooth finish.

The procedure used in the deflection tests is shown in Figure I where the supports are set up on parallels so that an inside micrometer might be used to measure the deflections. In the no load condition only the load rings (pulleys) were in place and deflections were read at each deflection ring between the supports. To apply the loads the weight supports (shown) were hung over the load rings and equal load weights, calibrated to .01#, were placed on the supports. Each separate weight (note two weights on table in Figure I) was 11.03 $\pm$ .01# and the weight supports weighed 1.39# at each end of the beam. The weight supports were designed so that no torsional moment would be applied to the beam when the load was applied. For each load condition 4 weights were placed on the beam, two at each end. The deflection rings were placed

bending criteria. The final beam design is shown in Figure IV.

The beam and its fittings were manufactured at the Boston Naval Shipyard. It was planed from solid stock, heat treated and planed to its final dimensions. Because of the length of the beam and the play in the planer bed it was found that the design tolerance could not be met. The beam micrometer readings are shown in Figure V. From these readings a mean value of flange thickness was taken as .1020" and mean beam depth of 1.3010". The moment of inertia of the section was calculated from these mean values and found to be .02913 in.^{4}. The support rings, load rings and deflection rings were hand filed and fitted to the beam snugly with a hand fit. The bed plate was surface ground to a smooth finish.

The procedure used in the deflection tests is shown in Figure I where the supports are set up on parallels so that an inside micrometer might be used to measure the deflections. In the no load condition only the load rings (pulleys) were in place and deflections were read at each deflection ring between the supports. To apply the loads the weight supports (shown) were hung over the load rings and equal load weights, calibrated to .01#, were placed on the supports. Each separate weight (made two weights on table in Figure I) was 11.03 ± .01# and the weight supports weighed 1.19# at each end of the beam. The weight supports were designed so that no torsional moment would be applied to the beam when the load was applied. For each load condition 4 weights were placed on the beam, two at each end. The deflection rings were placed

to give a spread of readings. Deflection ring 3 was placed 3" from the support, or two beam diameters distance so that the effect of the support would not be felt. This is in accordance with Saint Venant's principle.

The beam stiffness in bending was checked in two rotational positions. The initial position of the beam was with flange 3 vertically up at the mid-span of the beam. No load and loaded beam deflections were taken with the beam in this position. When the beam was unloaded it was rolled through 45° with flanges 3 and 4 thus: 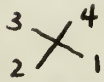

when looking at the beam from the left end in Figure III. At Run 15, when the largest value of β_0 was reached, the beam deflection was read with flange 3 at mid-span rotated through 360° with readings taken at each 45° interval. This beam rotation was accomplished to ascertain if the stiffness varied with the beam position on the supports. It seemed likely that if the beam stiffness varied with the angle of permanent twist that it might also vary with the position of the beam on the supports.

Strain gages, as shown in Figure VI, were placed on the beam to give possible aid in the analysis of results. These gages were all placed to indicate longitudinal strain near the outer fibers of the flanges in order that a longitudinal stress distribution might be had with the beam in a twisted condition. These gages were read only during the bending tests.

The beam was received in the straight condition from the Boston Naval Shipyard. The initial, straight beam deflection tests were made

to give a spread of readings. Deflections using 1 were placed 1" from the support, or two inches diametrically opposed so that the effect of the support would not be felt. This is in accordance with Saint Venant's principle.

The beam utilizer in loading was changed to the rotational position. The initial position of the beam was with flange 3 vertically up at the midspan of the beam. The unloaded and loaded zero deflections were taken with the beam in this position. When the beam was rotated it was rotated through 90° with flanges 2 and 4 down: 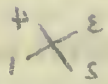 when looking at the beam from the left end in Figure III. At Nam 12, when the larger value of β was reached, the beam deflecting was read with flange 3 at mid-span rotated through 360° with readings taken at each 45° interval. This beam rotation was accomplished to ascertain if the attitude varied with the beam position on the supports. It seemed likely that if the beam utilizers varied with the angle of permanent twist that it might also vary with the position of the beam on the supports.

Strain gages, as shown in Figure VI, were placed on the beam to give possible aid in the analysis of results. These gages were all placed to indicate longitudinal strain near the outer fibers of the flanges in order that a longitudinal stress distribution might be had with the beam in a stressed condition. These gages were read only during the loading tests.

The beam was received in the straight condition from the Boston Navy Shipyard. The initial straight beam deflection tests were made

and checked against the calculated values found by using standard beam theory. In order to determine the modulus of elastity of the material a tensile test specimen was made by the shipyard and given the same heat treatment as the beam. A stress-strain curve was made from a tensile test and the modulus of elasticity was found to be 29.7×10^6 psi. The material had a proportional limit of 24,500 psi and an ultimate stress of 56,900 psi.

The torsional stiffness was found with the beam in the straight condition. This was done by holding the beam fixed at one end and applying a twisting moment at the other end. A twisting moment of 124.3 in. lbs. was used and the shear stresses set up in the beam were well within the elastic region of the beam material. The beam was held at one end by fastening a die stock to the load ring and holding the arms of the stock firmly to a stationary support. On the other end the load ring had been drilled and tapped (note holes in support ring at far end in Figure I) symetrically so that an arm could be fitted to it. This arm was grooved 10" from the center of the beam thus giving the arm of the moment. From this groove the load supports were hung along with one lead weight, or a total of 12.43#. With this load applied the arm was made to be horizontal by setting the position of the die stock at the other end. Therefore, the full moment acted on the beam. The load was then removed and the angle through which the beam untwisted with the other end fixed was measured by using a protractor. This made possible the calculation of the torsional stiffness. This test was

and another against the calculated values found by using standard beam theory. In order to determine the modulus of elasticity of the material a simple test apparatus was made up for the shipyard and given the same load treatment as the beam. A strong pipe cover was made from a handle bar and the modulus of elasticity was found to be 30.7 x 10^6 psi. The material had a proportional limit of 24,500 psi and an ultimate stress of 35,900 psi.

The lateral stiffness was found with the beam in the straight condition. This was done by holding the beam fixed at one end and applying a relating moment at the other end. A bolting moment of 124.3 in. lbs. was used and the beam stresses and in the beam were well within the elastic region of the beam material. The beam was held at one end by fastening a die stock to the lower flog and holding the arms of the stock firmly to a stationary support. On the other end the lower flog and some stiffed and tapped (one hole in support flog at far end to figure 1) symmetrically so that an arm could be fitted to it. This arm was provided w/ from the center of the beam thus giving the arm of the moment. From this point the load supports were hung along with our load weight, or a total of 12.4lb. With this load applied the arm was made to be horizontal by setting the position of the die stock at the other end. Therefore, the full moment arm on the beam. The load was then removed and the angle between which the beam corresponded with the other end then was measured by using a protractor. This made possible the determination of the lateral stiffness. This test was

also run with the beam on the bed plate.

The next phase was to apply a permanent twist to the beam. This was done by fastening the die stock to the load ring on one end of the beam and using the arm on the other end. The beam was placed freely on the bed plate and manually given a permanent twist. The beam was maintained straight by the bed plate in vertical plane but could possibly bend somewhat in the horizontal plane. But by carefully applying this torsional moment the bending of the beam could be minimized and it was found to be very small. Figure VIII shows the amounts of permanent twist put into the beam with each run.

With permanent twist in the beam the deflection and torsional tests were again made in the same manner as described above. The amount of permanent twist applied to the beam was to be small at the off set so that the initial trend of the stiffness curves could be accurately determined. After this trend had been found the angle of permanent twist between runs was increased as shown in Figure VIII. Permanent twist was applied to the beam up to the point where it became too stiff to twist manually. It was also necessary to check to see if the beam flanges warped from the twisting since if they did the moment of inertia of the section would be reduced. This was done by checking to see if the flanges were still at right angles and also by the tightness of the deflection rings on the beam.

also you will find some on the bed plate.

The next place was to supply permanent water to the boiler. This was done by fastening the air-stock to the load ring on one end of the beam and using the arm on the other end. The beam was placed freely on the plate and mechanically given a perpendicular twist. The beam was initiated straight up the new parts in vertical plane but could possibly need somewhat in the horizontal plane. But by carefully supplying this horizontal movement the bending of the beam could be minimized and it was found to be very small. Figure VIII shows the amounts of permanent twist put into the beam with each run.

With permanent twist in the beam the deflections and strains were again made in the same manner as described above. The amount of permanent twist applied to the beam was to be small at the end near to the inner tread of the stiffness curves could be accurately determined. After this trend had been found the angle of permanent twist between runs was increased as shown in Figure VIII. Permanent twist was applied to the beam up to the point where it becomes too stiff to twist manually. It was also necessary to check to see if the beam flanges warped from the twisting since if they did the moment of inertia of the section would be reduced. This was done by checking to see if the flanges were still at right angles and also by the slopes of the deflection curve on the beam.

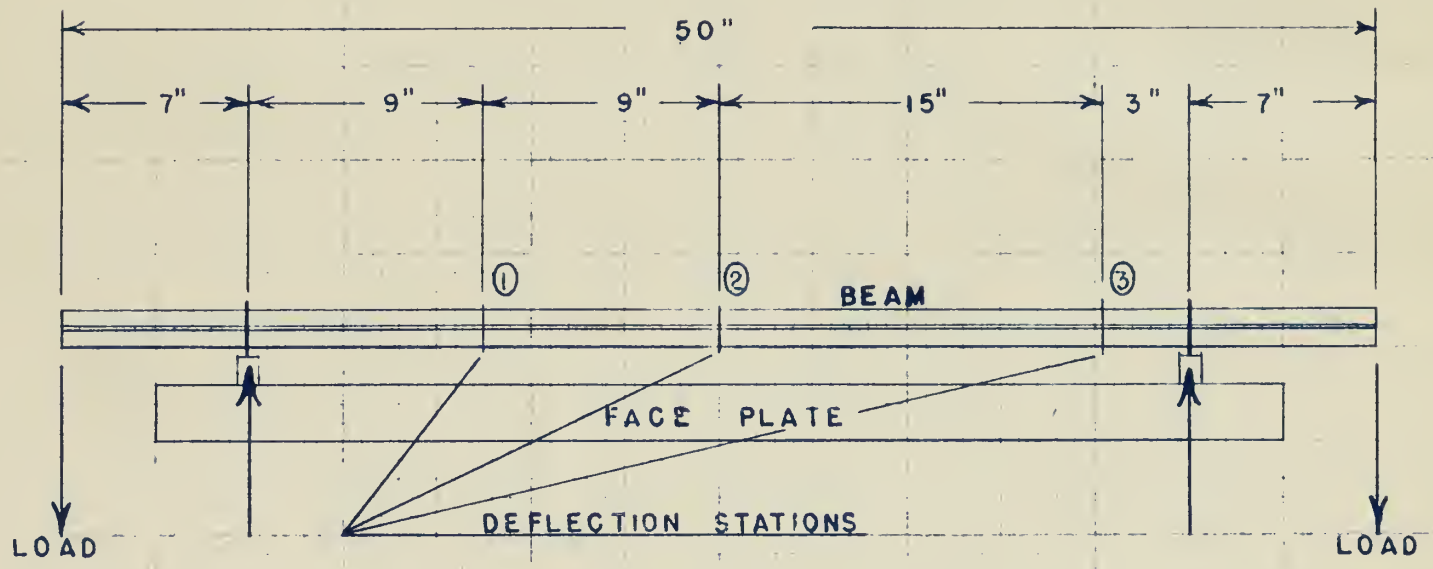

FIGURE III

BEAM ARRANGEMENT IN BENDING TESTS.

LHL
4-18-51

FIGURE IV

DESIGN DIMENSIONS OF BEAM AND FITTINGS.

	BILL OF MATERIAL		
PC.	ITEM	MATERIAL	QUAN.
1	BEAM	COLD ROLLED MILD STEEL	1
2	GAUGE	"	3
3A	PULLEY	"	2
3B	SUPPORT	"	2

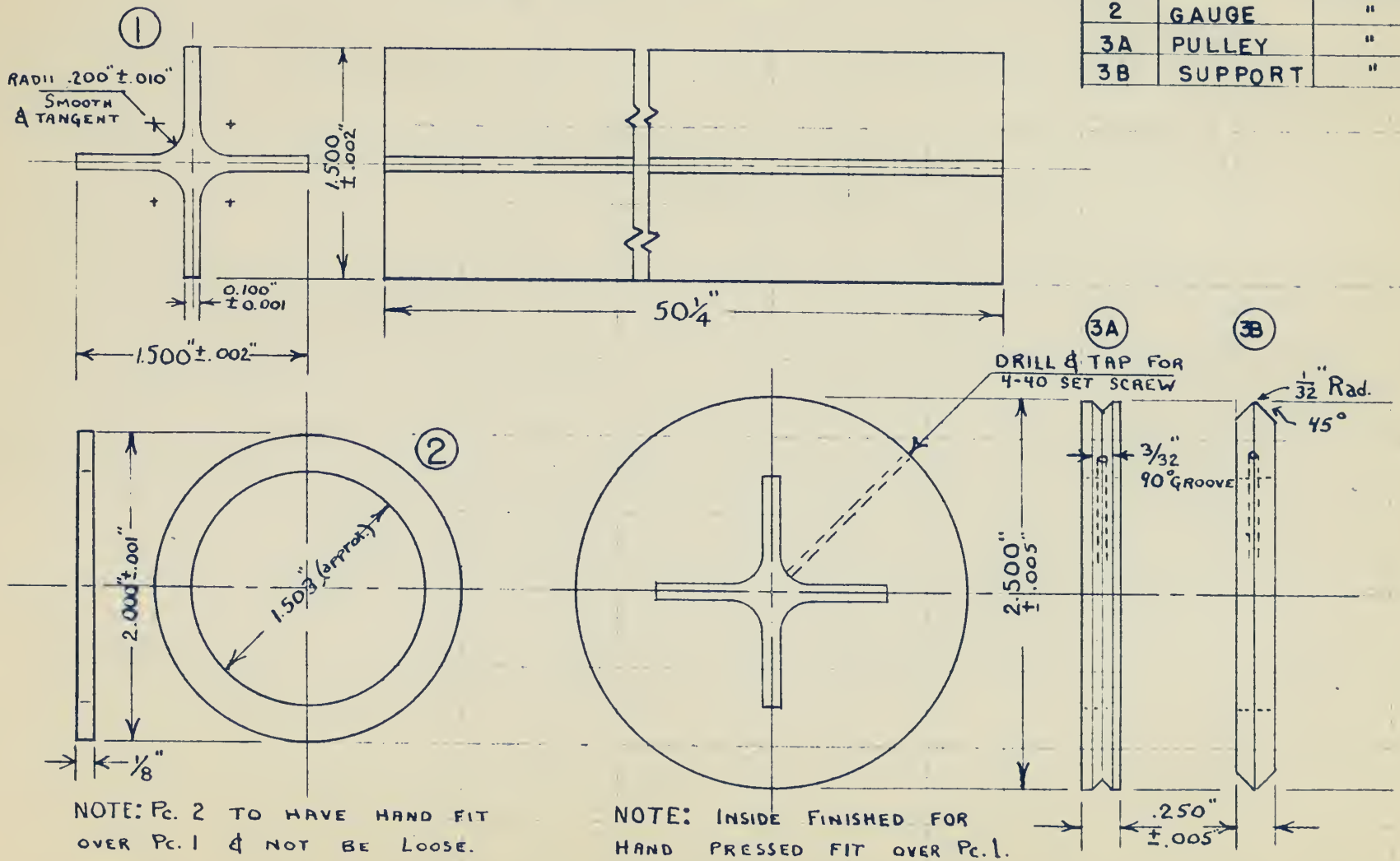

fw
LHZ
4-18-51

FIGURE V

MICROMETER READINGS OF BEAM DIMENSIONS.

STATION	FLANGE THICKNESS Fl.#1	Fl.#2	Fl.#3	Fl.#4	BEAM DEPTH Fls.1-3	Fls.2-4
0	.1023	.1017	.1023	.1030	1.5002	1.5033
1	.1003	.1008	.1015	.1002	1.5017	1.5035
2	.1006	.1010	.1016	.1010	1.5021	1.5041
3	.1014	.1018	.1028	.1025	1.5030	1.5047
4	.1015	.1024	.1033	.1021	1.5028	1.5040
5	.1018	.1012	.1033	.1004	1.5037	1.5037
6	.1023	.1016	.1030	.1013	1.5040	1.5038
7	.1028	.1019	.1040	.1028	1.5040	1.5037
8	.1020	.1016	.1038	.1025	1.5036	1.5032
9	.1010	.1002	.1015	.1006	1.5036	1.5028
10	.1011	.1003	.1015	.1016	1.5030	1.5035

Stations are spaced each 5 inches along length of the beam. Station 0 is at left end of the beam as seen in Figure III.

All measurements are in inches.

Flange thicknesses were measured at the outer edges of the flange.

JEW
JHJ
4-19-57

FIGURE VI

STRAIN GAGE DATA & LOCATION

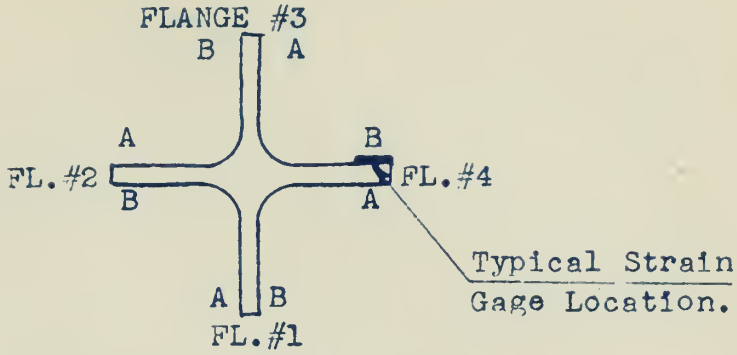

BEAM CROSS SECTION LOOKING AT BEAM IN FIGURE III FROM THE LEFT END

STRAIN GAGE LOCATIONS

The strain gages are designated as to location by the flange number, the flange face letter (A or B) and by their distance in inches from the left end of the beam as shown in Fig. III. Then gage 3A 16 would be on flange 3, on the A face and 16 inches from the left end. All gages were oriented to give longitudinal strain and the center of the gage resistance wires were 0.1" in from the outer edge of the flange.

STRAIN GAGE DATA

Type:	A-7
Res. in Ohms:	120
Gage Factor:	1.96
Lot Number:	501
Manufacturer:	Baldwin Loco. Works.

fw
JHL
4-19-51

RESULTS

The results of the torsion tests are shown in figures VII and VIII. It will be seen that the torsional stiffness increases with increased helical angle in approximately a parabolic manner and that the stiffness ratio J/J_s reaches 2.00 at a β_o of .27.

The results of the bending tests are shown in figures IX and X. It will be seen that the displacement ratio δ/δ_o, which is the reciprocal of the stiffness ratio $(EI)_o/(EI)$, increases with helical angle exponentially to a β_o of about .15. The exponent in this case is evidentially slightly less than 3. Above $\beta_o = .15$ the rate of increased δ/δ_o decreases until a maximum value of $\delta/\delta_o = 1.32$ at $\beta_o = .23$ is reached. The trend of the results continues with this drooping characteristic to the last experimental point of $\delta/\delta_o = 1.2$ at $\beta_o = .314$.

RESULTS

The results of the rotation tests are shown in figures VII and VIII. It will be seen that the rotational stiffness increases with increased initial angle in approximately a parabolic manner and that the stiffness ratio T/θ_0 reaches 2.00 at a β_0 of .47.

The results of the bending tests are shown in figures IX and X. It will be seen that the displacement ratio δ/δ_0, which is the reciprocal of the stiffness ratio $(EI)_0/EI$, increases with initial angle exponentially to a β_0 of about .15. The response in this case is evidentially slightly less than 3. Above β_0 = .15 the rate of increased δ/δ_0 decreases until a maximum value of δ/δ_0 = 1.55 at β_0 = .25 is reached. The trend of the results continues with this diminishing characteristic to the last experimental point of δ/δ_0 = 1.4 at β_0 = .316.

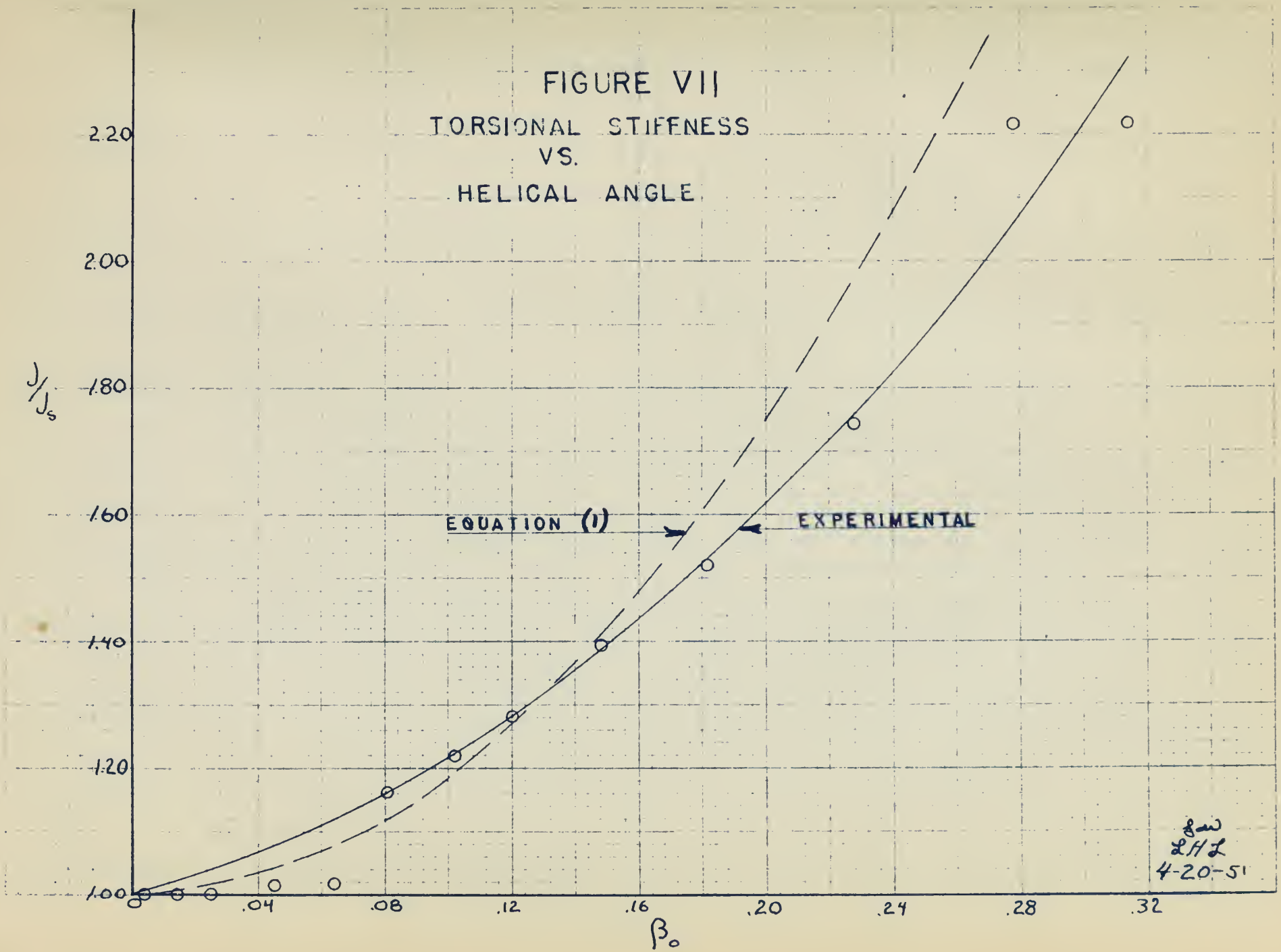
FIGURE VII
TORSIONAL STIFFNESS
VS.
HELICAL ANGLE
EQUATION (1)
EXPERIMENTAL
J/Js
2.20
2.00
1.80
1.60
1.40
1.20
1.00
.04
.08
.12
.16
.20
.24
.28
.32
βo
LHL
4-20-51

FIGURE VIII

TABLE OF TORSION DATA & RESULTS

RUN	α°	β_o	ϕ°	L'	θ	$\frac{J}{J_s} = \frac{.00426}{\theta}$
1	0	0	11	45.1	.00426	1.000
2	16	.0042	11	45.1	.00426	1.000
3	55	.0144	11	45.1	.00426	1.000
4	98	.0257	11	45.1	.00426	1.000
5	170½	.0447	12	50	.00418	1.018
6	243	.0639	12	50	.00418	1.018
7	307½	.0807	10½	50	.00366	1.162
8	389	.1022	10	50	.00349	1.220
9	458	.1200	9½	50	.00332	1.282
10	567	.1488	8¾	50	.00305	1.395
11	692	.1814	8	50	.00279	1.525
12	866	.227	7	50	.00244	1.744
13	866	.227	7	50	.00244	1.744
14	1063	.278	5½	50	.00192	2.217
15	1199	.314	5½	50	.00192	2.217

JW
LHL
4-19-51

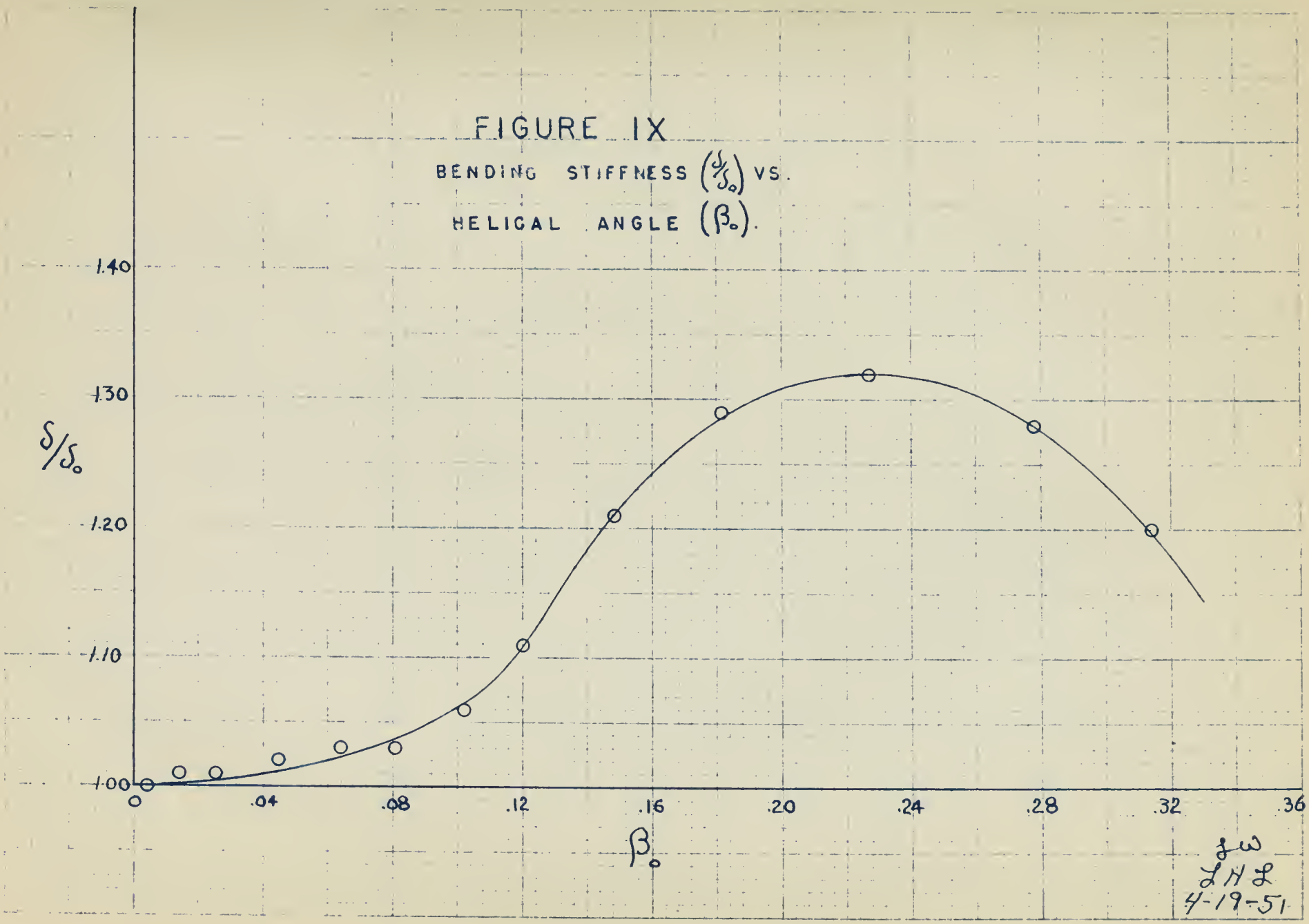
FIGURE IX
BENDING STIFFNESS (S/S₀) VS.
HELICAL ANGLE (β₀).
1.40
1.30
1.20
1.10
1.00
S/S₀
0
.04
.08
.12
.16
.20
.24
.28
.32
.36
β₀
JW
LHL
4-19-51

FIGURE X

TABLE OF DISPLACEMENTS OF POINT 3 & SUPPORT
FROM POINT 2; CENTER OF BEAM.

Symbols as shown in Figure X1

X indicates beam rotated 45°.

RUN δ/δ_o	Load	δ_3	δ_s	δ_3/δ_{30}	δ_s/δ_{so}
Theory	Ld.1	.021	.031		
	Ld.2	.040	.059		
RUN 1	Ld.1	.021	.030	1.00	.98
	Ld.2	.040	.059	1.00	1.00
1.00 X	Ld.1	.021	.031	1.00	1.00
X	Ld.2	.040	.059	1.00	1.00
RUN 2	Ld.1	.021	.030	1.00	0.97
	Ld. 2	.041	.060	1.02	1.02
1.00 X	Ld.1	.021	.030	1.00	0.97
X	Ld.2	.040	.060	1.00	1.02
RUN 3	Ld.1	.022	.031	1.05	1.00
	Ld.2	.041	.059	1.02	1.00
1.01 X	Ld.1	.022	.031	1.05	1.00
X	Ld.2	.040	.059	1.00	1.00
RUN 4	Ld.1	.021	.031	1.00	1.00
	Ld.2	.041	.059	1.02	1.00
1.01 X	Ld.1	.021	.031	1.00	1.00
X	Ld.2	.042	.059	1.05	1.00
RUN 5	Ld.1	.021	.031	1.00	1.00
	Ld.2	.041	.059	1.02	1.00
1.02 X	Ld.1	.022	.031	1.05	1.00
X	Ld.2	.042	.060	1.05	1.02
RUN 6	Ld.1	.022	.032	1.05	1.03
	Ld.2	.043	.061	1.07	1.03
1.03 X	Ld.1	.021	.031	1.00	1.00
X	Ld.2	.041	.060	1.02	1.02
RUN 7	Ld.1	.022	.031	1.05	1.00
	Ld.2	.043	.061	1.07	1.03
1.03 X	Ld.1	.021	.031	1.02	1.00
X	Ld.2	.041	.060	1.02	1.02

RUN δ/δ_o	Load	δ_3	δ_s	δ_3/δ_{30}	δ_s/δ_{so}
RUN 8	Ld.1	.022	.032	1.05	1.03
	Ld.2	.043	.062	1.07	1.05
1.06 X	Ld.1	.022	.032	1.05	1.03
X	Ld.2	.043	.062	1.07	1.05
RUN 9	Ld.1	.023	.034	1.10	1.10
1.11	Ld.2	.045	.066	1.12	1.12
RUN 10	Ld.1	.025	.037	1.19	1.19
1.21	Ld.2	.050	.072	1.25	1.22
RUN 11	Ld. 1	.027	.040	1.29	1.29
1.29	Ld.2	.052	.076	1.30	1.29
RUN 12&13	Ld.1	.028	.040	1.33	1.29
	Ld.2	.053	.077	1.33	1.31
1.32 X	Ld.1	.028	.041	1.33	1.32
X	Ld.2	.053	.078	1.33	1.32
RUN 14	Ld.1	.027	.040	1.29	1.29
	Ld.2	.051	.076	1.27	1.29
1.28 X	Ld.1	.027	.039	1.29	1.26
X	Ld.2	.051	.075	1.27	1.27
RUN 15	Ld.1	.026	.037	1.24	1.19
	Ld.2	.048	.072	1.20	1.22
1.20 X	Ld.1	.025	.037	1.19	1.19
X	Ld.2	.047	.071	1.18	1.20
R 16 90°	Ld.1	.025	.037	1.19	1.19
R 17 135°	Ld.1	.025	.037	1.19	1.19
R 18 180°	Ld.1	.026	.037	1.24	1.19
R 19 225°	Ld.1	.025	.037	1.19	1.19
R 20 270°	Ld.1	.026	.037	1.24	1.19
R 21 315°	Ld.1	.025	.037	1.19	1.19

JW
LHL
4-17-51

FIGURE XI

BENDING DEFLECTION NOTATIONS

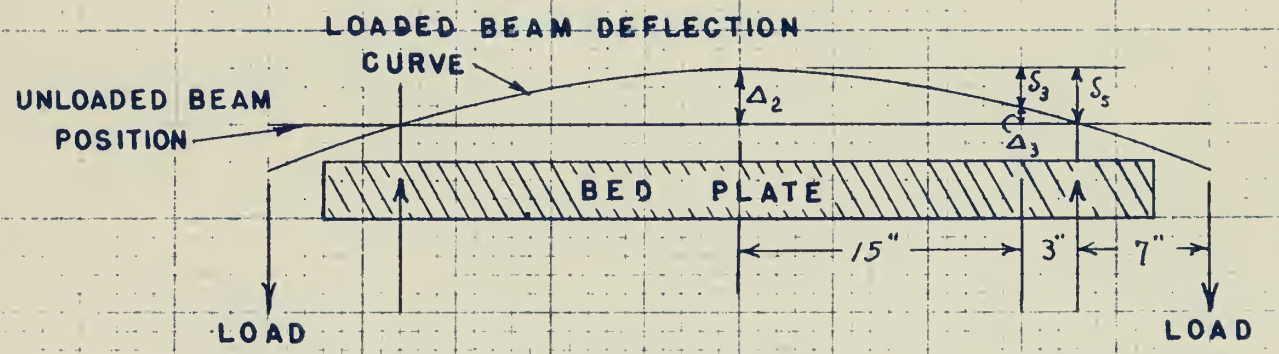

$$\delta_3 = \Delta_2 - \Delta_3$$

$$\delta_s = \Delta_2$$

gw
LHL
4-20-51

DISCUSSION OF RESULTS

The results of torsional experimentation are compared in Figure VII with the theoretical results of Chu in reference 1, which are based on the following equation:*

$$J/J_s = 1 + 2\left[\frac{2}{15}(1+\mu)\,\beta_0^2\left(\frac{c}{h}\right)^2\right] \qquad (1)$$

Where μ = poisson's ratio, assumed .3

c = chord = 1.503"

h = thickness = .102"

J = torsional stiffness

$J_s = \frac{G}{3} c h^3$ from membrane analogy, in this case corrected for fillets.

It is readily observable that the results are compatable within limits set by the experimental limitations of the set up used in this thesis. Due to the lack of precision in measuring angles on the guage rings the angles were measured from end to end of the entire beam. Consequently there is an indeterminent error due to the constraint of the support rings which may be noted in figures I and II. In order to bring the results more closely in line, rather complex changes would have to be made in the theory to account for fillets.

The results of the bending tests are; to the best of the author's knowledge, the first ever to be obtained, therefore there are no other

---

*Ref. 1, pg. 150.

DISCUSSION OF RESULTS

The results of torsional experimentation are compared in Figure VII with the theoretical results of Cox in reference 1, which are based on the following equation:*

$$J/J_0 = 1 + 2\left[\frac{5}{15}(1+\mu)\,\rho_0^2\left(\frac{c}{h}\right)^2\right] \qquad (1)$$

Where μ = poisson's ratio, assumed .3

c = chord = 1.002"

h = thickness = .102"

J = torsional stiffness

$J_0 = \frac{c}{3}\,c\,h^3$ from membrane analogy, in this case corrected for fillets.

It is readily observable that the results are acceptable within limits set by the experimental limitations of the set up used in this thesis. Due to the lack of precision in measuring angles on the gage rings the angles were measured from end to end of the entire beam. Consequently there is an instrumentation error due to the constriction of the angular rings which may be noted in figures I and II. In order to bring the results more closely in line, rather complex changes would have to be made in the theory to account for fillets.

The results of the bending tests are, to the best of the author's knowledge, the first ever to be obtained, therefore there are no other

---

*Ref. 1, pg. 150.

results or equations available for comparison. At small angles of twist below $\beta_0 = .15$ the trend of δ/δ_0 is exponential at a rate slightly less than the cube of β_0. Above this point the curve droops, reaches a maximum of $\delta/\delta_0 = 1.32$ at $\beta_0 = .23$ and continues to the last experimental point of $\delta/\delta_0 = 1.2$ at $\beta_0 = .314$. Calculations were made as shown in Appendix C. Point 1 was not used because the slight variation in beam dimensions accentuated the error for δ_1 to an inacceptable degree. The errors inherent in the system and due to the supports, as mentioned under the torsional results; and due to lack of straightness and the consequent error if there is a slight rotation of the beam in different load conditions. It is believed that the entire beam was elastic and that the E was nearly constant during these runs, as final no- load readings checked original no- load readings for every bending test.

It was noted that the beam did not warp from the application of the permanent twist nor did the deflection rings loosen appreciably.

Despite the limited scope of these results, they show a definite loss in bending stiffness in twisted members. They are the first quantitative results to be obtained to this problem and thus are important in themselves, and as proof that further research will be rewarding.

Strain gage readings have been included in the data section of the Appendix, however, no attempt has been made to analyse them. They do, however, indicate that no permanent set took place in the beam during the bending tests. This is readily seen by obtaining the

results are equations available for comparison. At small angles of twist below $\beta_0 = .15$ the trend of δ/δ_0 is exponential at a rate slightly less than the code of β_0. Above this point the curve diverges, reaches a maximum of $\delta/\delta_0 = 1.32$ at $\beta_0 = .23$ and continues to the last experimental point of $\delta/\delta_0 = 1.4$ at $\beta_0 = .114$. Calculations were made as shown in Appendix C. Point 1 was not used because the slight variation in beam dimensions accentuated the error for δ_1 to an inexcusable degree. The errors inherent in the system tend due to the accuracy, as mentioned under the torsional results, not due to lack of straightness and the consequent error if there is a slight rotation of the beam in different load conditions. It is believed that the entire curve was elastic and that the [illegible] nearly constant during these results as load and non-load readings showed original non-load readings for every loading run.

It was intended that the beam did not vary from the application of the previous load but did the deflection-strain loading-unloading.

Despite the limited scope of these results, they show a definite loss in bending stiffness in twisted members. Step-one the first qualitative results to be obtained in this problem and that are important in determining and as proof that further research will be worthwhile.

Strain gage readings have been included in the data section of the Appendix, however, no attempt has been made to analyze them. They do, however, indicate that the permanent set took place in the beam during the bending work. This is readily seen by obtaining the

strain a 3A 25 for each run, for it is noted that for each run this strain is nearly constant at 220 micro inches per inch with Ld. 2 or beam.

CONCLUSIONS AND RECOMMENDATIONS

It is concluded that the torsional results check those of Chu in reference 1, and that his equations may be used with confidence for cross sections that do not vary a great deal from simple finned forms.

The bending results show a definite loss of bending stiffness in twisted members and may be taken as the first results in a series of tests to establish workable theories for the many applications of twisted beams.

It is recommended that future tests be modified to maintain straightness and that the beam be annealed in each twisted position to assure constant E.

CONCLUSIONS AND RECOMMENDATIONS

It is concluded that the theoretical results check those of Cox in reference 1, and that his equations may be used with confidence for cross sections that do not vary a great deal from simple flexed forms.

The bending results show a definite loss of bending stiffness in twisted members and may be taken as the first results in a series of tests to establish workable theories for the many applications of twisted beams.

It is recommended that future tests be modified to maintain straightness and that the beam be mounted in each twisted position to assure contact 2.

APPENDIX

APPENDIX A

Application of the Membrane Analogy.

With the beam in the initial straight condition it would be well to calculate the torsional stiffness of the beam by using the membrane analogy. This analogy establishes certain relations between the deflection surface of a uniformly loaded membrane and the distribution of stress in a twisted bar. The portion of the analogy to be used here states that twice the volume included between the surface of the deflected membrane and the plane of its outline is equal to the torque of the twisted bar.

The probelm of finding the volume under the membrane that would lie over the cross section of our beam is complicated by the fillets. This cross section is shown in Figure XII. It is assumed that the membrane takes a parabolic shape. Therefore, the area A is

$$A = b^3 G\theta/6 \qquad (2)$$

where b = width of cross section
G = modulus of shear (11,500,000 psi)
θ = angle of twist in radians per inch

The problem was resolved into finding the three volumes 1, 2 and 3, and because of the symmetry of these volumes the total volume could be found. Region 1 was readily solved since b is directly known, as is the length of this straight section. In region 2 the values of b_1, b_2, b_3 and b_4 were found by using trigonometry and thus their parabolic areas were found. The volume of this region was then found by using Simpson's rule utilizing five equally spaced stations. The volume in region 3 was found in the same manner. However, in region 3 stations b'_2, b'_3 and b'_4

APPENDIX A

Application of the Membrane Analogy.

With the beam in the initial straight condition it would be well to calculate the torsional stiffness of the beam by using the membrane analogy. This analogy establishes certain relations between the deflection surface of a uniformly loaded membrane and the distribution of stress in a twisted bar. The portion of the analogy to be used here states that twice the volume included between the surface of the deflected membrane and the plane of its outline is equal to the torque of the twisted bar.

The problem of finding the volume under the membrane that would lie over the cross section of our beam is complicated by the fillets. This cross section is shown in Figure XII. It is assumed that the membrane takes a parabolic shape. Therefore, the area A is

$$A = b^2 G \theta / 4 \qquad (2)$$

where b = width of cross section
G = modulus of shear (11,500,000 psi)
θ = angle of twist in radians per inch

The problem was resolved into finding the three volumes 1, 2 and 3, and because of the symmetry of these volumes the total volume could be found. Region 1 was readily solved since b is directly known as is the length of this straight section. In region 2 the values of b_1, b_2, b_3 and b_4 were found by using trigonometry and then their parabolic areas were found. The volume of this region was then found by using Simpson's rule utilizing five equally spaced stations. The volume in region 3 was found in the same manner. However, in region 3 stations b_1', b_2' and b_3'

do not extend to the edge of the section and the areas at these stations are made up of a rectangle beneath a parabola. The parabolic area is found by using Equation (2). The length of the base of the rectangle is known since it is the same as the base length of the parabola. The height of the rectangle is obtained from the height of the parabola at the appropriate points on station b_4. Therefore, this height would be the mid-point height for station b'_3 and the quarter point height for stations b'_4 and b'_2. The quarter point heights of b'_4 will be three-quarters the mid-height because of parabolic shape of the section.

Since the torque of the bar is equal to twice the volume beneath the membrane, the torque interms of θ follow directly. The calculated results give θ = .00379 radians/inch. From Figure VIII it is seen that for the straight beam the experimental results are 11° twist in a length of 45.1". The value of the experimental twist was than .00426 radians/inch, or 11% greater than the calculated value. This difference in results can be accounted for by the membrane not having the exact parabolic shape that was assumed and by a possible error of 3% in measuring the angle of elastic twist. With these probable errors in mind the experimental and calculated angles of elastic twist are considered to be in good agreement.

do not extend to the edge of the section and the areas at these stations are made up of a rectangle beneath a parabola. The parabolic area is found by using Equation (2). The length of the base of the rectangle is known since it is the same as the base length of the parabola. The height of the rectangle is obtained from the height of the parabola at the appropriate points on stations b_1. Therefore, this height would be the mid-point height for stations b_1' and the quarter point height for stations b_1'' and b_1'''. The quarter point heights of b_1' will be three-quarters the mid-height because of parabolic shape of the section.

Since the torque of the bar is equal to twice the volume beneath the membrane, the torque intensity of Φ follows directly. The calculated results give Φ = .00317 radians/inch. From Figure VIII it is seen that for the straight beam the experimental results are 11° twist in a length of 43.1". The value of the experimental twist was than .00426 radians/inch, or 11% greater than the calculated value. This difference in results can be accounted for by the membrane not having the exact parabolic shape that was assumed and by a possible error of 3% in measuring the angle of elastic twist. With these probable errors in mind the experimental and calculated angles of elastic twist are considered to be in good agreement.

FIGURE XII

PORTION OF BEAM CROSS SECTION SHOWING STATIONS USED IN CALCULATING MEMBRANE VOLUME USED WITH MEMBRANE ANALOGY.

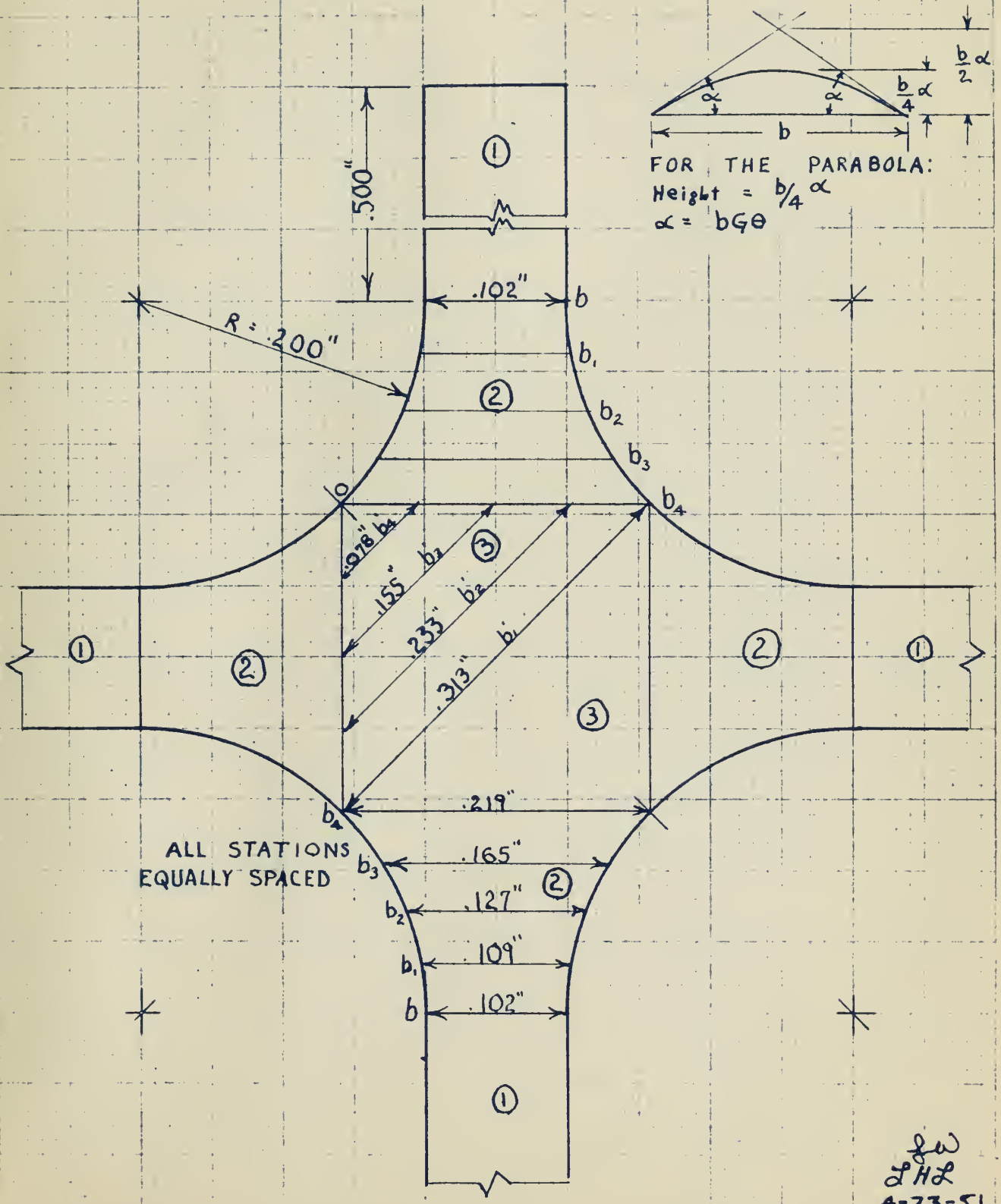

fw
LHL
4-23-51

APPENDIX B

DATA

A copy of all original data appears in Figures VIII, XIII and XIV.

APPENDIX B

DATA

A copy of all original data appears in Figures VIII, XIII and XIV.

FIGURE XIII

DEFLECTION READINGS IN INCHES AT VARIOUS STATIONS, VALUES OF β_o, & VALUES OF LOAD.

NL No load on beam.
Ld.1 Load of 23.47# at each end of beam
Ld.2 Load of 45.51# at each end of beam

S indicates deflection station as shown on Figure III.
Add 1" it all readings for actual deflection above bed plate.

	THEORY $\beta_o = 0$		RUN 1 $\beta_o = 0$		RUN 2 $\beta_o = .0042$		RUN 3 $\beta_o = .0144$		RUN 4 $\beta_o = .0257$		RUN 5 $\beta_o = .0447$		RUN 6 $\beta_o = .0639$		RUN 7 $\beta_o = .0807$		RUN 8 $\beta_o = .1022$	
	S2	S3	S2	S3	S2	S3	S2	S3	S2	S3	S2	S3	S2	S3	S2	S3	S2	S3
NL	.750	.750	.750	.750	.751	.751	.751	.752	.753	.753	.754	.753	.755	.753	.756	.752	.756	.753
Ld.1	.781	.760	.780	.759	.781	.760	.782	.761	.784	.763	.785	.763	.787	.763	.787	.761	.788	.763
Ld.2	.809	.769	.809	.769	.811	.770	.810	.770	.812	.771	.813	.771	.816	.771	.817	.770	.818	.772
NL	.750	.750	.750	.750	.751	.751	.751	.752	.753	.753	.754	.753	.755	.753	.756	.752	.756	.753
	BEAM ROTATED 45°																	
NL	.750	.750	.750	.750	.751	.751	.753	.752	.753	.753	.754	.754	.754	.753	.753	.750	.754	.751
Ld.1	.781	.760	.781	.760	.781	.760	.784	.761	.784	.763	.785	.763	.785	.763	.784	.760	.786	.761
Ld.2	.809	.769	.809	.769	.811	.771	.812	.771	.812	.770	.814	.772	.814	.772	.813	.769	.816	.770
NL	.750	.750	.750	.750	.751	.751	.753	.752	.753	.753	.754	.754	.754	.753	.753	.750	.754	.751

See PROCEDURE for method used in beam rotation.

	RUN 9 $\beta_o = .1200$		RUN 10 $\beta_o = .1488$		RUN 11 $\beta_o = .1814$		RUN 12&13 $\beta_o = .227$		RUN 14 $\beta_o = .278$		RUN 15 $\beta_o = .314$		R 16 90° $\beta_o = .314$		R 18 180° $\beta_o = .314$		R 20 270° $\beta_o = .314$	
	S2	S3	S2	S3	S2	S3	S2	S3	S2	S3	S2	S3	S2	S3	S2	S3	S2	S3
NL	.760	.752	.761	.752	.765	.751	.763	.750	.760	.751	.755	.751	.750	.750	.745	.749	.750	.750
Ld.1	.794	.763	.798	.764	.805	.764	.803	.762	.800	.764	.792	.762	.787	.762	.782	.760	.787	.761
Ld.2	.826	.773	.833	.774	.841	.775	.840	.774	.836	.776	.827	.775	--	--	--	--	--	--
NL	.760	.752	.761	.752	.765	.751	.763	.750	.760	.751	.755	.751	.750	.750	.745	.749	.750	.750
	BEAM ROTATED						45°		45°		45°		R 17 135°		R 19 225°		R 21 315°	
NL	--	--	--	--	--	--	.755	.751	.754	.751	.753	.751	.747	.749	.747	.749	.753	.751
Ld.1	--	--	--	--	--	--	.796	.764	.793	.763	.790	.763	.784	.761	.784	.761	.790	.763
Ld.2	--	--	--	--	--	--	.833	.776	.829	.775	.824	.775	--	--	--	--	--	--
NL	--	--	--	--	--	--	.755	.751	.754	.751	.753	.751	.747	.749	.747	.749	.753	.751

JH
THI
4-16-51

FIGURE XIV

STRAIN GAGE READING IN MICRO INCHES PER INCH
FOR VARIOUS VALUES OF β_o AND FOR VARIOUS LOADS.

N.L. = No load on the beam
LD.1 = Load of 23.47# at each end of beam.
Ld.2 = Load of 45.51# at each end of beam

STRAIN GAGE	RUN 1 β_o = 0			RUN 2 β_o = .0042			RUN 3 β_o = .0144			RUN 4 β_o = .0257			RUN 5 β_o = .0447			RUN 6 β_o = .0639		
	N.L.	Ld.1	Ld.2	N.L.	Ld.1	Ld.2	N.L.	Ld.1	Ld.2	N.L.	Ld.1	Ld.2	N.L.	Ld.1	Ld.2	N.L.	Ld.1	Ld.2
3A 34	5719	5820	5920	5740	5850	5950	5790	5890	6000	5950	6040	6150	6240	6330	6420	6600	6670	6740
3A 25	6494	6595	6695	6445	6545	6650	6440	6540	6660	6470	6570	6680	6680	6790	6905	6940	7070	7160
3A 20½	5360	5470	5580	5370	5480	5590	5400	5510	5630	5480	5590	5710	5700	5810	5920	6120	6230	6350
3A 16	6800	6895	7000	6800	6900	7000	6770	6870	6980	6910	7000	7110	7160	7270	7330	7630	7700	7780
4B 34	6213	6220	6230	6240	6250	6260	6250	6240	6250	6390	6370	6350	6740	6690	6650	7070	7000	6920
4B 25	5917	5925	5930	5940	5950	5960	5890	5840	5910	5990	6000	6020	6380	6400	6420	6670	6690	6700
4B 16	5910	5910	5915	5915	5930	5950	5990	6010	6050	6090	6120	6180	6430	6500	6570	6680	6770	6860
4B 20½	5655	5665	5675	5580	5720	5755				GAGE NOT GOOD								
2A 25	6810	6790	6785	6820	6810	6790	6760	6740	6740	6840	6820	6800	7040	7020	7010	7520	7520	7500
1B 25	6855	6735	6630	6820	6750	6630	6900	6780	6680	6980	6860	6750	7210	7090	6980	7650	7540	7420

STRAIN GAGE	RUN 7 β_o = .0807			RUN 8 β_o = .1022			RUN 9 β_o = .1200			RUN 10 β_o = .1488			RUN 11 β_o = .1814			RUN 12 β_o = .227		
	N.L.	Ld.1	Ld.2	N.L.	Ld.1	Ld.2	N.L.	Ld.1	Ld.2	N.L.	Ld.1	Ld.2	N.L.	Ld.1	Ld.2	N.L.	Ld.1	Ld.2
3A 34	7080	7130	7160	7800	7820	7860	8380	8370	8370	0230	0210	0150		GAGE NOT GOOD				
3A 25	7390	7490	7600	7800	7920	8050	8080	8210	8340	9930	0050	0150	1750	1850	1950	GAGE NOT		GOOD
3A 20½	6670	6770	6880	7320	7400	7510	7940	8030	8120	9410	9490	9560		GAGE NOT GOOD				
3A 16	8130	8170	8240	8600	8460	8480	8130	8160	8170	9130	9100	9080	0300	0420	0590	GAGE NOT		GOOD
4B 34	7530	7420	7320	8280	8150	8050	9860	9700	9510	1180	1060	0930		GAGE NOT GOOD				
4B 25	7180	7180	7180	7900	7910	7940	8390	8410	8420	0410	0430	0440		GAGE NOT GOOD				
4B 16	7220	7310	7400	8000	8100	8220	8360	8490	8620	9940	0050	0160		GAGE NOT GOOD				
2A 25	8060	8040	8030	8860	8820	8800	9330	9320	9300	0810	0790	0770		GAGE NOT GOOD				
1B 25	8040	7910	7780	8910	8760	8630	9440	9320	9180	0820	0700	0560		GAGE NOT GOOD				

JW
HL
4-15-51

APPENDIX C

SAMPLE CALCULATIONS

The following calculations were made for Run 10:

$\alpha = 567^\circ \qquad L' = 50'' \qquad r_0 = 0.751'' \qquad \phi = 8.75^\circ$

$$\beta_0 = \frac{\alpha \times r_0}{57.3 \times L} = \frac{567 \times .751}{57.3 \times 50} = 0.1488 \text{ rad.}$$

Torsion Calculations:

$$\theta = \frac{\phi}{57.3 \times L'} = \frac{8.75}{57.3 \times 50} = 0.00305 \text{ rad/in.}$$

$$J/J_s = \frac{.00426}{\theta} = \frac{.00426}{.00305} = 1.395$$

Bending Calculations:

	S2	S3	Δ_2	Δ_3	δ_3	δ_s
NL	1.761	1.752	---	---	---	---
Ld.1	1.798	1.764	.037	.012	.025	.037
Ld.2	1.833	1.774	.072	.022	.050	.072
NL	1.761	1.752	---	---	---	---

Δ at Ld. 1 = reading at Ld. 1 - reading at NL

$\delta_3 = \Delta_2 - \Delta_3$

$\delta_s = \Delta_2$

	δ_3/δ_{30}	δ_s/δ_{s0}
Ld. 1	$.025/.021 = 1.19$	$.037/.031 = 1.19$
Ld. 2	$.050/.040 = 1.25$	$.072/.059 = 1.22$

$$\delta/\delta_0 = \frac{1.19 + 1.19 + 1.25 + 1.22}{4} = 1.21$$

APPENDIX C

SAMPLE CALCULATIONS

The following calculations were made for run 10:

$\alpha = 56.7^\circ \qquad L' = 50'' \qquad r_o = 0.751'' \qquad \phi = 8.75^\circ$

$$\beta_o = \frac{\alpha \times r_o}{57.3 \times L} = \frac{56.7 \times .751}{57.3 \times 50} = 0.1489 \text{ rad.}$$

Torsion Calculations:

$$\theta = \frac{\phi}{57.3 \times L'} = \frac{8.75}{57.3 \times 50} = 0.00305 \text{ rad/in.}$$

$$\gamma/\gamma_s = \frac{.00426}{\theta} = \frac{.00426}{.00305} = 1.395$$

Bending Calculations:

	NL	S3	Δ_2	Δ_3	δ_3	δ_2
NL	1.101	1.152	---	---	---	---
Ld.1	1.178	1.244	.067	.012	.055	.037
Ld.2	1.213	1.274	.072	.022	.050	.072
XL	1.261	1.284	---	---	---	---

Δ at Ld. 1 = reading at Ld. 1 - reading at NL

$\delta_3 = \Delta_2 - \Delta_3$

$\delta_2 = \Delta_2$

	δ_3/δ_{30}	δ_2/δ_{20}
Ld.1	$.055/.031 = 1.19$	$.037/.031 = 1.19$
Ld.2	$.050/.040 = 1.25$	$.072/.059 = 1.22$

$$\delta/\delta_o = \frac{1.19 + 1.19 + 1.25 + 1.22}{4} = 1.21$$

APPENDIX D

BIBLIOGRAPHY

(1) Chen Chu, "The Elastic Behavior of the Twisted Bourdon Tube as a Pressure Responsive Element." Sc. D. Thesis, Massachusetts Institute of Technology, 1950.

(2) S. Timoshenko, "Strength of Materials," Vol. II, 2nd Edition, 1945.

APPENDIX B

BIBLIOGRAPHY

(1) Chen Chen, "The Elastic Behavior of the Twisted Bourdon Tube as a Pressure Responsive Element," Sc. D., Thesis, Massachusetts Institute of Technology, 1956.

(2) R. Timoshenko, "Strength of Materials," 2nd. Ed. and Edition, 1955.